Ritsumeikan University Global COE

Global Center of Excellence for Education, Research and Development of Strategy on Disaster Mitigation of Cultural Heritage and Historic Cities

Global Center of Excellence for Education, Research and Development of Strategy on Disaster Mitigation of Cultural Heritage and Historic Cities

Newsletter No.16

Contents

February 2011

Ground Survey at the Slope under the Main Building of Kiyomizu Temple

Ryoichi Fukagawa(Prof., College of Science and Engineering, Department of Civil Engineering, Ritsumeikan University), Kazunari Sako(Associate Prof., Ritsumeikan Global Innovation Research Organization, Ritsumeikan University), Akira Daizo(Graduate student, Graduate School of Science and Engineering, Ritsumeikan University)

Kiyomizu temple is one of the most popular cultural assets. The temple is located on the east area of Kyoto basin, which is surrounded by a lot of active faults. Therefore, it is necessary to create a seismic hazard mitigation program for high-risk buildings.

Ritsumeikan researchers have carried out seismic response analysis for the main building of Kiyomizu temple. And, Ritsumeikan Geomechanics Engineering Laboratory conducted ground surveys at a slope under the main building of Kiyomizu temple to evaluate seismic slope stability.

In the ground survey, penetration tests using NSWS (Nippon Screw Weight System) Method were conducted to examine strength of soil in the slope. Figs. 1 and 2 show the schema of NSWS apparatus. NSWS method consists of two processes: the first process is conducted to examine the penetration depth with regards to vertical loading (0 – 1200N). When the vertical loading reaches 1200N, and the amount of penetration depth is 0cm, the second process is carried out. The second process is conducted to examine the penetration depth due to number of rotations of penetration rod. The parameter (N-Value) that shows soil strength is determined using the results obtained from the above two processes.

Fig. 3 shows the schema of NSWS tests at the slope under the main building. The purpose of this examination is to estimate strength of soil in the slope. Examination points are shown in Fig.4 and results of point D are shown in Fig.5. It is seen from Fig.5 that the strength of soil at the shallow depth (from 0 – 6m depth) is low. However, the strength of soil increases afterward. The base of the ground is measured at the depth of around 10m. In near future, the strength parameters for seismic response analysis will be determined from the penetration test results. Finally, seismic slope stability will be estimated.

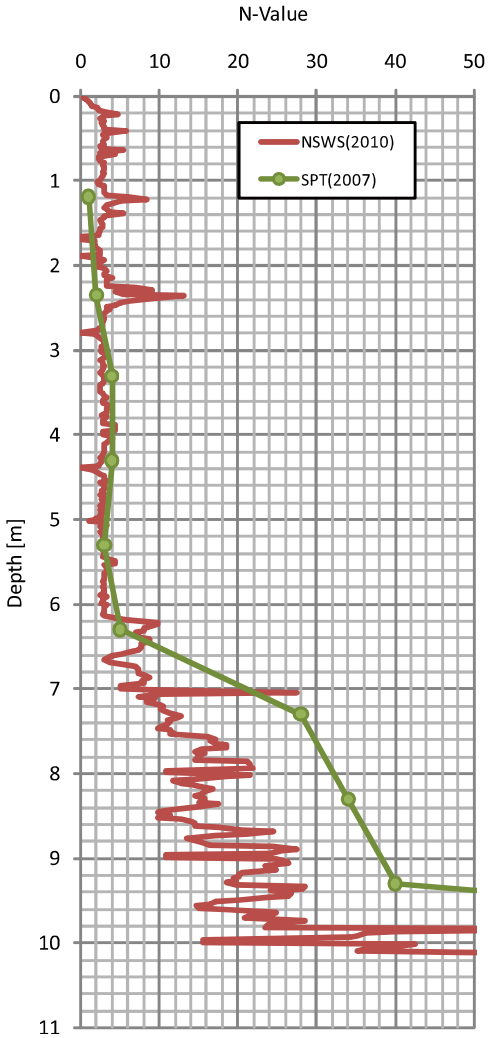

Fig. 5 Test results (Point D)

Acknowledgement

The work reported in this topic is substantially supported by Kiyomizu temple (Mr. Mori and Mr. Fukuoka), Kyoto Prefecture Cultural Properties Division (Mr. Tsuruoka and Mr. Shiraishi), and Okita-Ko Co., Ltd (Mr. Okita).

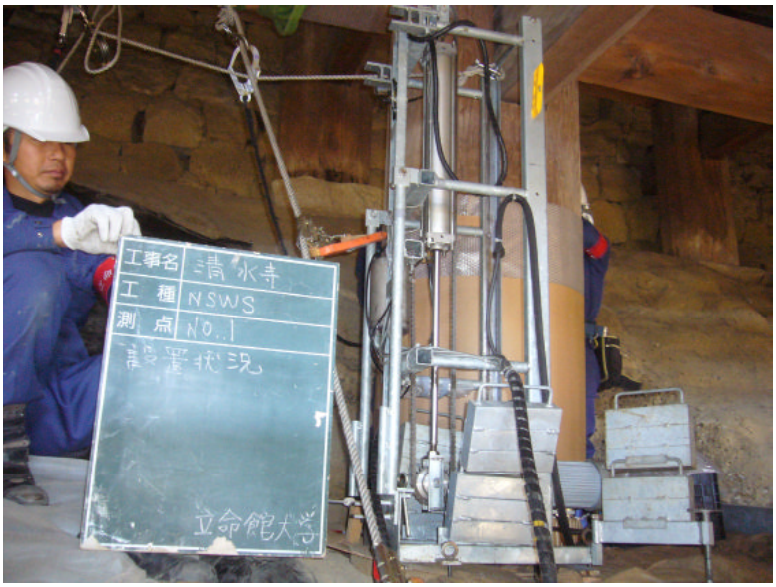

Fig.1 NSWS apparatus

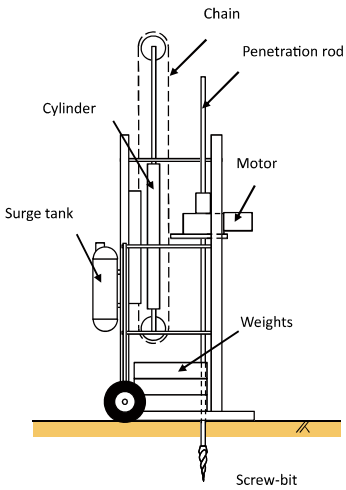

Fig.2 Schema of NSWS apparatus

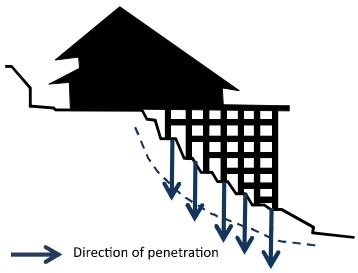

Fig.3 Schema of NSWS tests

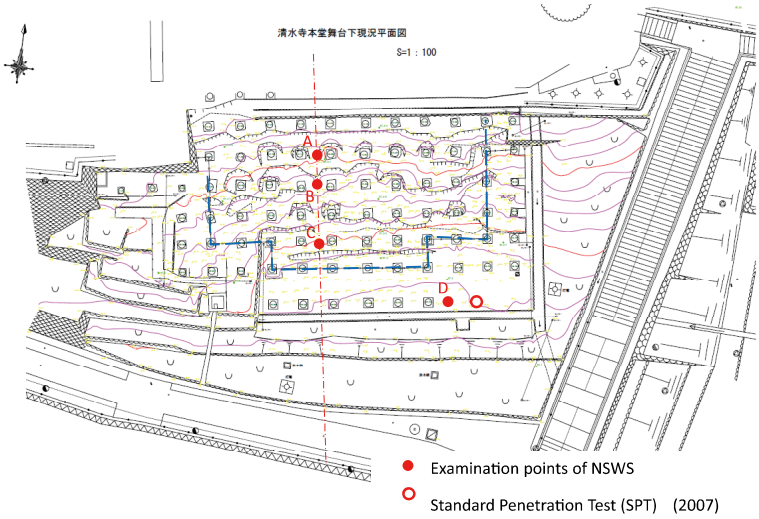

Fig.4 Examination points of NSWS

Report of the UNESCO Chair Program
on the International Training Course on Disaster Risk Management of Cultural Heritage 2010

UNESCO Chair Program on International Training Course on Disaster Risk Management of Cultural Heritage 2010 was held from 13 to 26 September 2010 in Kyoto, Kobe and Sasayama, Japan and pleasingly had been presented for the fifth time. In the light of destructive Haiti earthquake on January 2010, this fifth International Training Course especially focused on emergency response and long term recovery of wooden and masonry composite Cultural Heritage from disasters. It was attended by 11 participants from 5 countries: Kingdom of Bhutan, Republic of Palau, Republic of Peru, Republic of Serbia and Republic of Turkey.

The training course comprises classroom lectures, field-based learning at World Heritage sites in Japan such as site visit and workshop. In order to complement this year's theme, the course set the field-based learning in Kobe and historic area of Sasayama. In Kobe, participants had opportunity to learn from the practical experience of long term recovery following 1995 Great Hanshin Awaji earthquake and in Sasayama, they developed outline of the community engagement in disaster risk management plan at settlement level. Through these practical methods, the participants formulated the disaster management plan for case study site from their own countries.

On the final day of the course, the international symposium titled "How to protect Cultural Heritage from Disaster; Risk Preparedness and Post Disaster Recovery" was organized by Ritsumeikan University and the ICOMOS International Committee on Risk Preparedness (ICORP). In the symposium, the current challenges for protection of cultural heritages taking into account the context of post disaster recovery was discussed in great depth with international experts from UNESCO, ICOMOS, ICORP and a representative of Kyo-o-Gokokuji Temple, World Cultural Heritage site in Kyoto.

The UNESCO Chair program on the International Training Course on Disaster Risk Management of Cultural Heritage is continuously organized by Ritsumeikan University in the response to the increasing vulnerability of cultural heritage properties to various disasters. The course builds on the rich experience gained through the previous courses and active participation of lecturers, resource persons and international participants from worldwide and intends to enrich the contents of course in subsequent years.


Site Visit in Historic area of Sasayama


Workhop

Report of the International Symposium 2010

Disaster Risk Management of Cultural Heritage Sustainable Conservation of Urban Heritage in Seismic Zones -Post-Disaster Recovery Experiences: The Role of Structural Engineers and Conservation Architects

Symposium:Chaired by Ms. Gibu and Ms.Shimada(right)

Dr.Pimentel, a Venice Chareter signatory, particpated

The International Symposium 2010 was held on December 3, 2010 in Lima, Peru. It was organized by the Research center for Disaster Mitigation of Urban Cultural heritage of Ritsumeikan University(Rits-DMUCH), Kyoto, Japan and the Peruvian Japanese Seismic and Disaster Mitigation Research Center of the National University of Engineering(UNI-CISMID) based on their MOU, with the support of ICOMOS-ICORP. The Vice-Minister of Ministry of Culture, the representative of Embassy of Japan, President of UNI inaugurated by their speech on the importance of this theme in Peru.

The symposium was chaired by Ms. Keiko Mendoza Shimada of Rits-DMUCH and Ms. Patricia Gibu of UNI-CISMID, and 20 experts from both conservation and disaster management sides made their presentations and discussions on many subjects including the case study reports on their World Heritage city; Arequipa and Lima. At the end, after the panel discussion on the roles of architects and engineers, they adopted the “Lima Declaration for Disaster Risk Management of Cultural Heritage”.

Call for Papers: Conference on Disaster Mitigation of Urban Cultural Heritage '11

The Conference on Disaster Mitigation of Urban Cultural Heritage '11 will take place in Kyoto, July 2, 2011. The papers and reports related to vulnerability of cultural heritage, historical disasters, disaster mitigation technologies for cultural heritage, disaster mitigation planning and policy of historical cities, and practical activities on cultural heritage disaster mitigation are welcome and encouraged. Submitted papers will undergo the peer review. Non-reviewed reports will be checked their themes and formats. The deadline for submission of paper is May 6, 2011. Please see the details on our webpage. → http://www.rits-dmuch.jp/en/coe/information.html

The 3rd Ideas Competition for Disaster Mitigation of Cultural Heritage and Historic Cities

The 3rd Ideas Competition for Disaster Mitigation of Cultural Heritage and Historic Cities invites the proposals for design and idea to lead to the better city environment, as well as to promote the disaster mitigation of cultural heritage. Please refer to the following homepage for the details of the competition, and the past winning entries. The deadline for the submission is May, 6th, 2011.
→ http://www.bunkaisan-competition.jp/

Newsletter No.16 (February 2011)
Global Center of Excellence for Education, Research and Development of Strategy on Disaster Mitigation of Cultural Heritage and Historic Cities, Ritsumeikan University

Issuing Organization:
Secretariat of Ritsumeikan University G-COE Program

Head Office (Biwako-Kusatsu Campus Office)
111 Research Center for Disaster Mitigation Systems
1-1-1, Noji Higashi, Kusatsu, Shiga 525-8577, Japan
TEL: +81-77-561-5083
FAX: +81-77-561-3418
Email: heritage@st.ritsumei.ac.jp

Kinugasa Campus Office
Research Center for Disaster Mitigation of Urban Cultural Heritage
58, Komatsubara Kitamachi, Kita-ku, Kyoto 603-8341, Japan
TEL: +81-75-467-8801
FAX: +81-75-467-8825
Email: rekibou@st.ritsumei.ac.jp